PUMPER

BODY
Medium Aluminum 2nd Gen Pumper

CHASSIS
Saber FR Chassis

CHASSIS

AXLE, FRONT, CUSTOM
18,000 Lb Dana Axle

AXLE, REAR
27,000 Lb Dana Axle

ENGINE
450 HP Cummins L9 Engine

TRANSMISSION
Allison 6th Gen, 3000 EVS P

BUMPER
19" Extended Stainless Steel

CAB
7010 Saber FR Cab

BODY

WATER TANK
1000 Gallon New York Style Water Tank

COMPT, PUMPER, REAR
30.75" FF RollUp Rear Compt

COMPT, PUMPER, LEFT SIDE
152" RollUp Full Height Front & Rear FDLER

COMPT, PUMPER, RIGHT SIDE
152" RollUp Low FDLER

FIRE SUPPRESSION

PUMPHOUSE
48" Control Zone Side Mount

PUMP
1500 GPM Waterous CXC20

CROSSLAYS, 1.50"
(2) 1.50" Standard Capacity

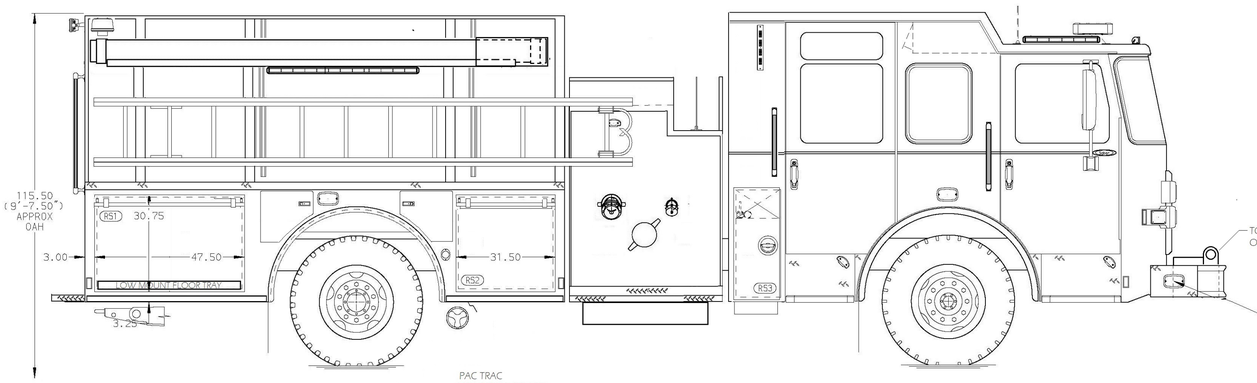

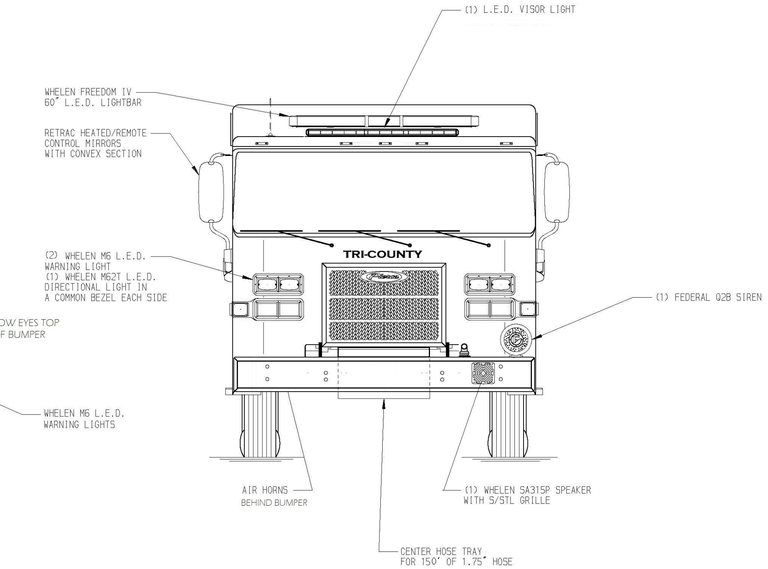

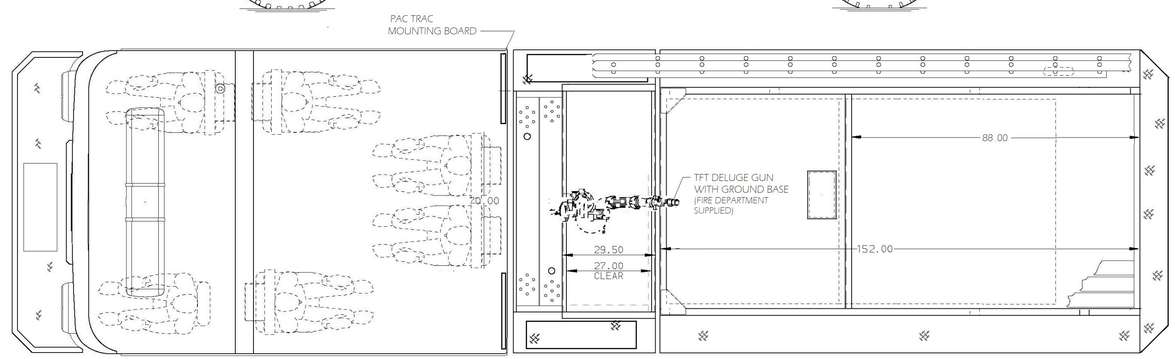

HOSEBED CAPACITY

BED 1
300' OF 1.75" D.J. POLY HOSE

BED 2
300' OF 2.50" D.J. POLY HOSE

BED 3
1200' OF 5.00" D.J. POLY HOSE

BED 4
500' OF 3.00" D.J. POLY HOSE

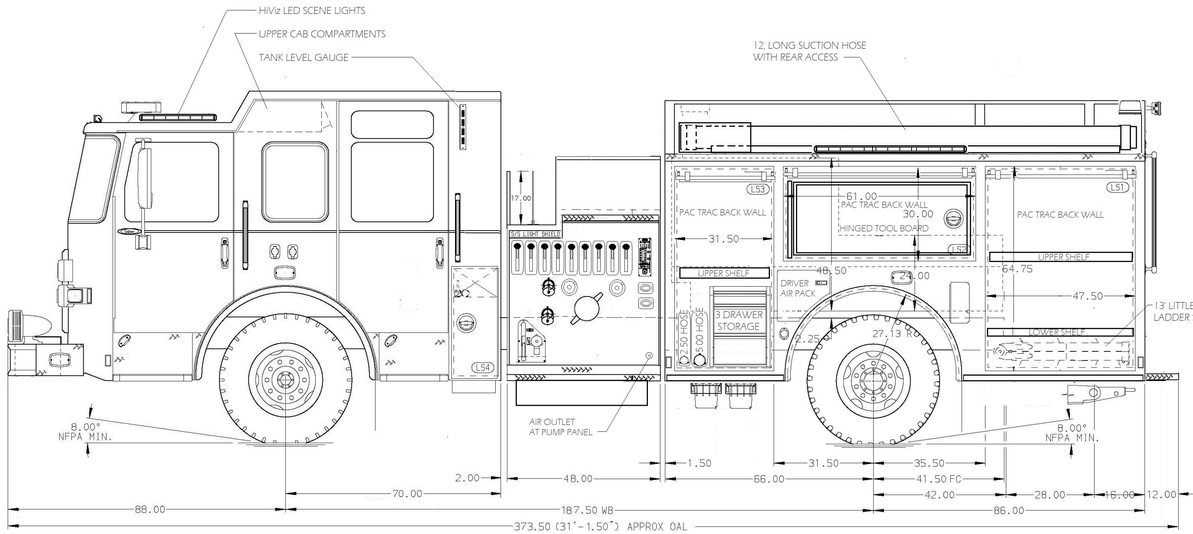

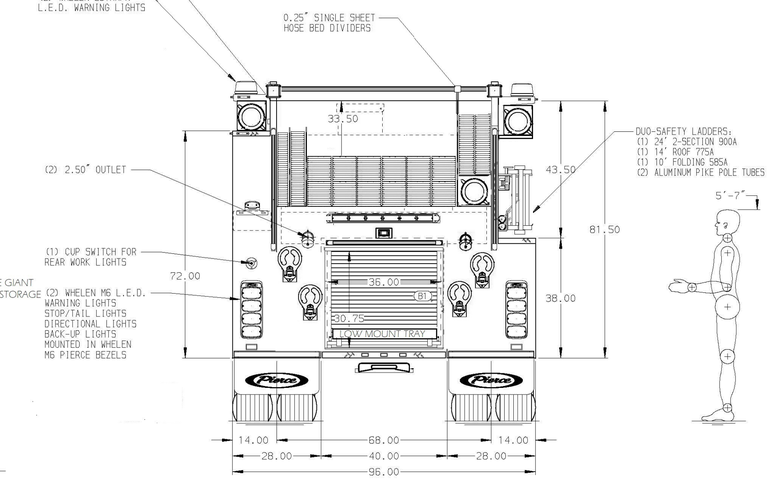

NOTE
DIMENSIONS SHOWN ARE APPROXIMATE AND ARE SUBJECT TO MINOR DEVIATIONS AS MAY OCCUR OR BE NECESSARY IN CONSTRUCTION.
MINOR DETAILS NOT SHOWN.

CUSTOMER APPROVAL
APPROVED BY: _____
DATE: _____

REV	DATE	BY	CH
C	122122	EET	
B	101322	EET	
A	082522	EET	-

CHASSIS DATA
MAKE: PIERCE
MODEL: Saber FR

Pierce MANUFACTURING INC.

TITLE: PIERCE SABER PUMPER - 1500 GPM PUMP, 1000 WATER TANK WITH LOW HOSEBED, DELUGE
FOR: TRI-COUNTY FIRE COMPANY
MANSFIELD TOWNSHIP, WARREN COUNTY, NEW JERSEY
DWG NO.: PRELIMINARY DRAWING

JOB NO.	–
SCALE 1:24	DATE
DRAWN BY EET	15JULY22
CHECKED BY –	–
SHEET SIZE D	SHEET NO. 1 OF 1

Created 15-JUL-2022 12:46:48