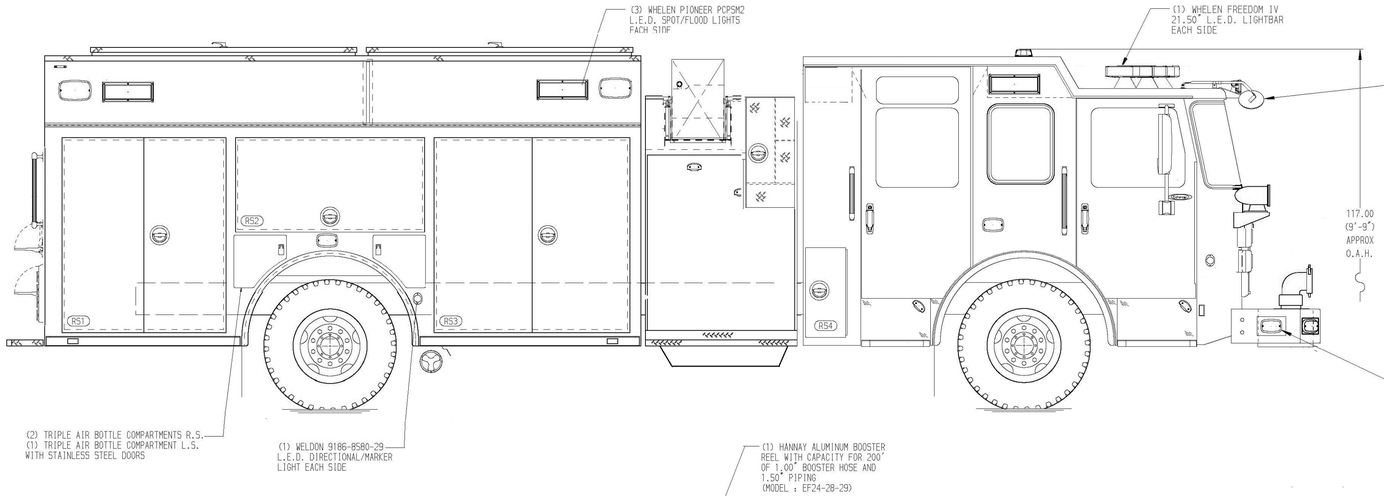

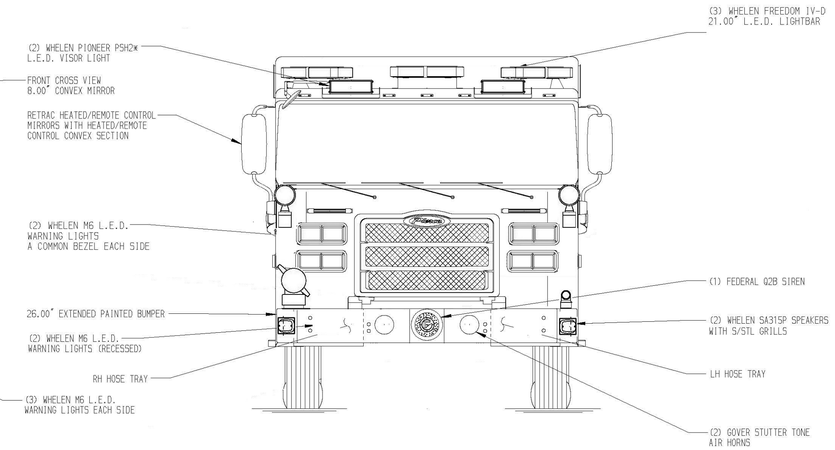

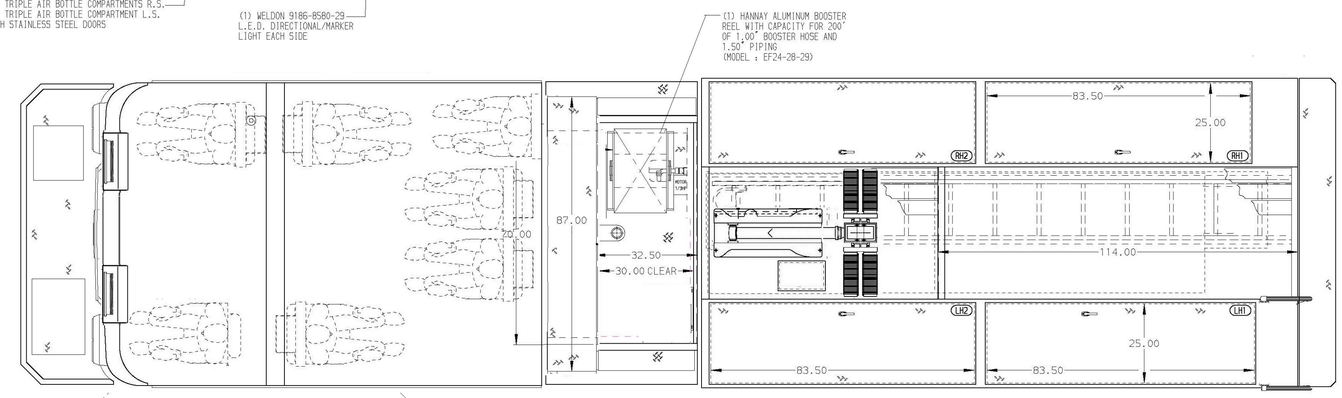

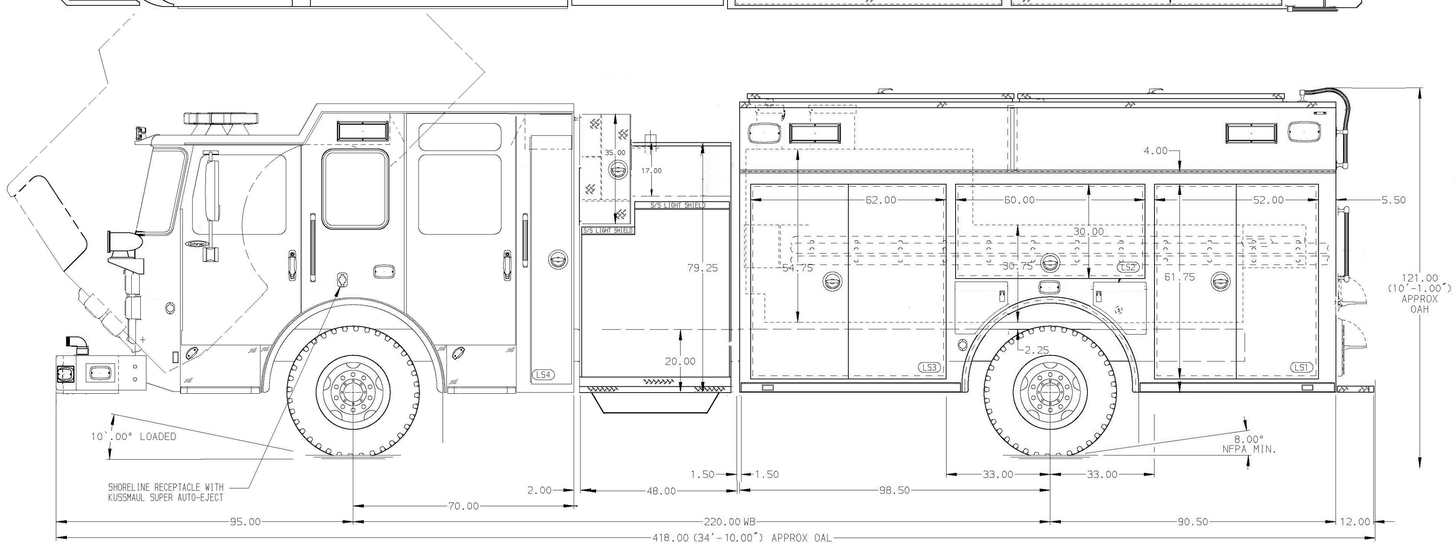

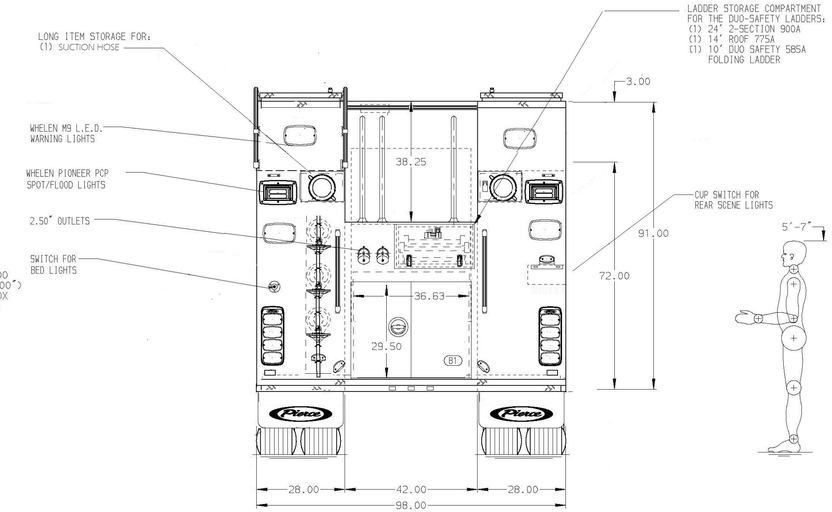

CHASSIS	CAB	AXLE, FRONT, CUSTOM	TRANSMISSION	PUMPHOUSE
Enforcer Chassis	7010 Enforcer Cab	22,800 lb Dana Axle	Allison 5th Gen, 4000 EVS P	48" Control Zone Side Mount
ENGINE	**BUMPER**	**AXLE, REAR**		**PUMP**
500 HP Cummins X12 Engine	22" Extended Painted Steel	27,000 lb Dana Axle		1500 GPM Hale QMAX

FRONTAL IMPACT PROTECTION

NOTE

DIMENSIONS SHOWN ARE APPROXIMATE AND ARE SUBJECT TO MINOR DEVIATIONS AS MAY OCCUR OR BE NECESSARY IN CONSTRUCTION.
MINOR DETAILS NOT SHOWN.

REV	DATE	BY	CH
C	101322	EET	
B	052522	EET	
A	051722	EET	

CHASSIS DATA — MAKE: PIERCE — MODEL: ENFORCER

TITLE: 1500-D-750P, 750 GAL WATER, 189" HDRP, LADDERS THRU TANK, BOOSTER REEL

FOR: DEEPWATER FIRE COMPANY, PENNSVILLE TOWNSHIP, NEW JERSEY

DWG NO.: PRELIMINARY DRAWING

Pierce MANUFACTURING INC.

JOB NO.	
SCALE 1:24	DATE
DRAWN BY EET	06MAY22
CHECKED BY	
SHEET SIZE D	SHEET NO. 1 OF 1