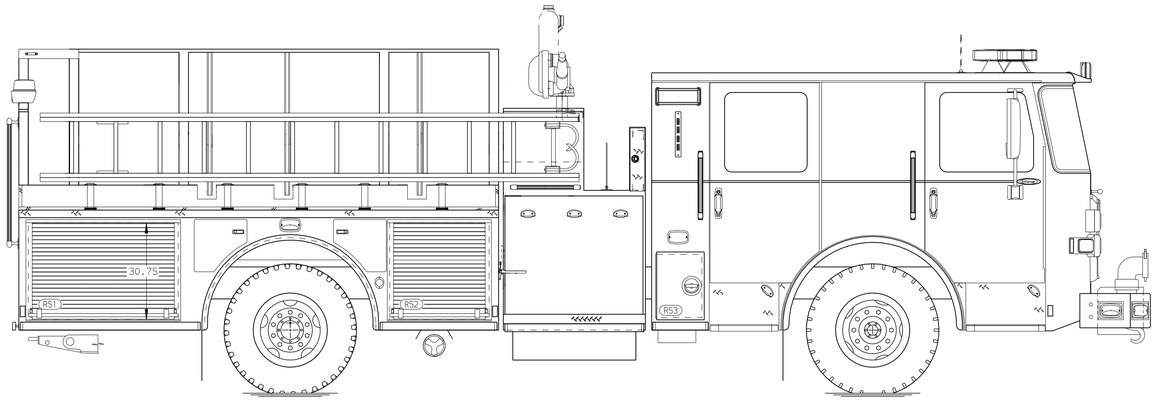

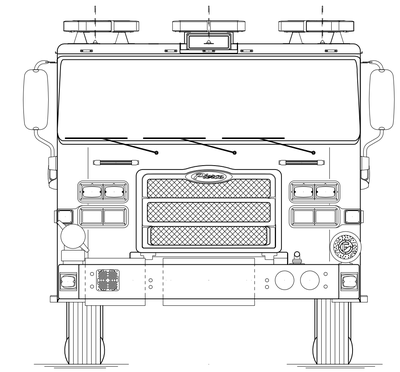

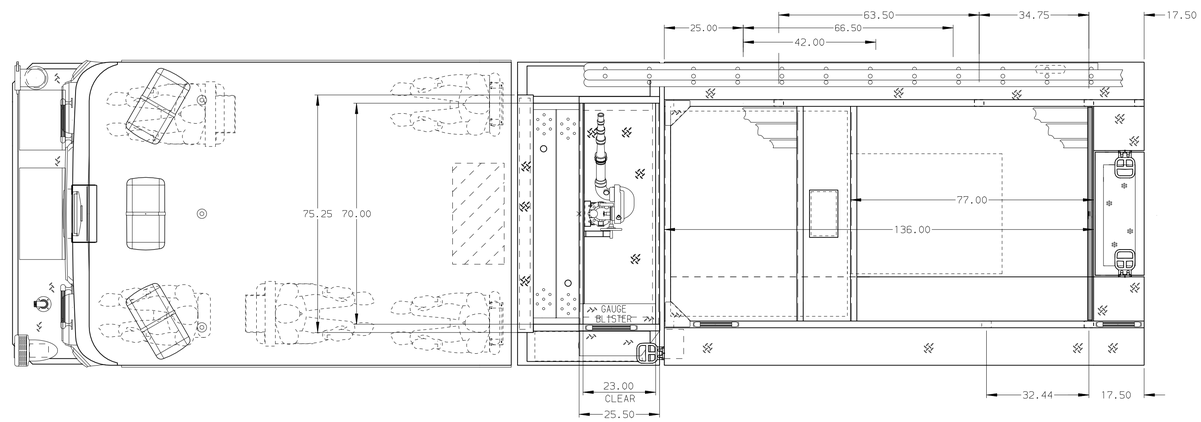

HOSEBED CAPACITIES

1. 500' OF 3.00" D.J. POLY HOSE
2. 1000' OF 5.00" D.J. POLY HOSE
3. 500' OF 2.50" D.J. POLY HOSE
4. 200' OF 1.75" D.J. POLY HOSE

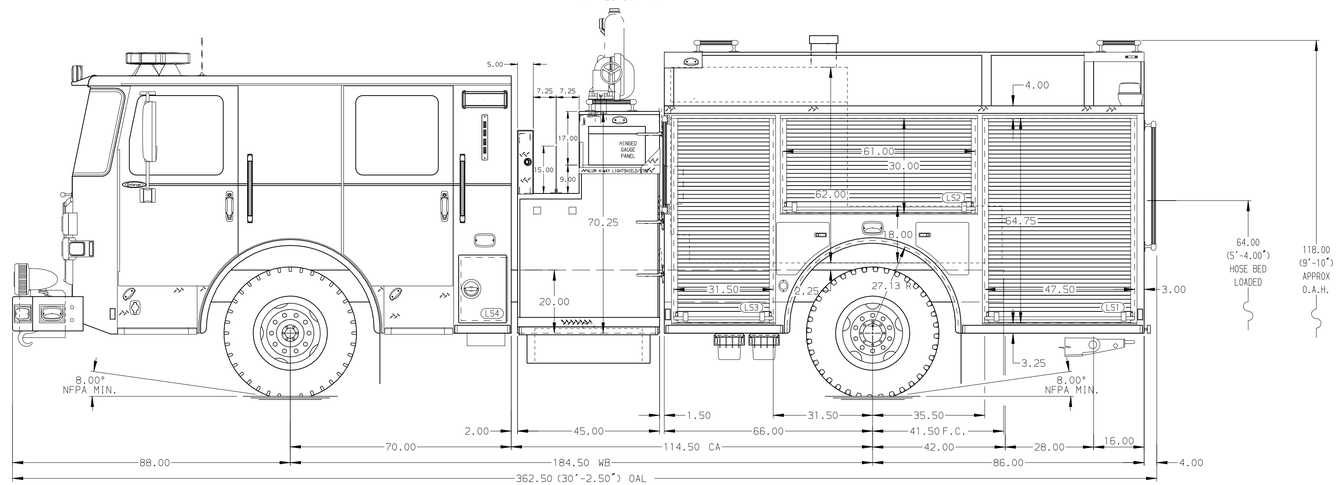

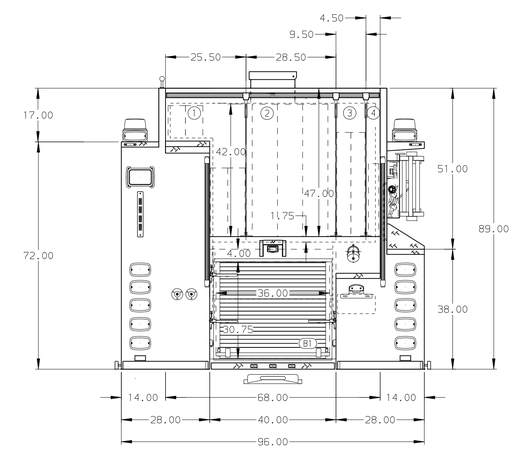

ALUMINUM BODY

MAXIMUM O.A.L. 363.00"

NOTE

DIMENSIONS SHOWN ARE APPROXIMATE AND ARE SUBJECT TO MINOR DEVIATIONS AS MAY OCCUR OR BE NECESSARY IN CONSTRUCTION.
MINOR DETAILS NOT SHOWN.

CUSTOMER APPROVAL

APPROVED BY: _____

DATE: _____

REV	DATE	BY	CH
B	08AUG22	LST	NPA
A	25FEB22	LST	NPA

CHASSIS DATA
MAKE: PIERCE
MODEL: ENFORCER

Pierce MANUFACTURING INC.

TITLE: 1500-D-750 GAL POLY, 152" FH FD LEFT SIDE, LOW FDLER RIGHT SIDE, LADDER BRACKETS, (2) CROSSLAYS, DELUGE

FOR: CITY OF CLIFTON BID# 854
FIRE & SAFETY SERVICES, LTD. GREGG CARIDDI

DWG NO. 04-9266

JOB NO.	PRELIM
SCALE	1:24
DATE	
DRAWN BY	LST
	05AUG21
CHECKED BY	NPA
	06AUG21
SHEET SIZE	D
SHEET NO.	1 OF 1