RIGHT SIDE COMPARTMENTS CONTAIN THE FOLLOWING:

COMPARTMENT RS1 CONTAINS:
- (2) STD DEPTH ADJ SHELVES
- (1) FLOOR MOUNTED TRAY
- (1) 4-DRAWER C-TECH CABINET
- (1) 15A,120V DUPLEX RECEPTACLE
-
-

COMPARTMENT RS2 CONTAINS:
- (1) 2-WAY ADJ SLIDE OUT TRAY
- (1) 1/2 DEPTH ADJ SLIDE OUT/TILT TRAY
- (1) 15A,120V DUPLEX RECEPTACLE
-

COMPARTMENT RS3 CONTAINS:
- (1) HORIZONTAL FLOOR EXTENSION
- (1) VERTICAL COMPARTMENT DIVIDER
- (2) 1/2 DEPTH ADJ SHELVES
- (1) 1/2 DEPTH ADJ SLIDE OUT TRAY WITH TOOLBOARD
- (4) ZICO SCBA BOTTLE BRACKETS
- (1) 15A,120V DUPLEX RECEPTACLE
- (1) STD DEPTH ADJ SHELF
- (1) RACK FOR 5 SCBA BOTTLES
-

COMPARTMENT RS4 CONTAINS:
- (1) CAB LIFT CONTROLLER
- (1) 1/2 DEPTH ADJ SLIDE OUT TRAY
- (1) 1/2 DEPTH ADJ SLIDE OUT/TILT TRAY
- (1) FLOOR MOUNTED TRAY
- (1) 15A,120V DUPLEX RECEPTACLE
-
-
-
-

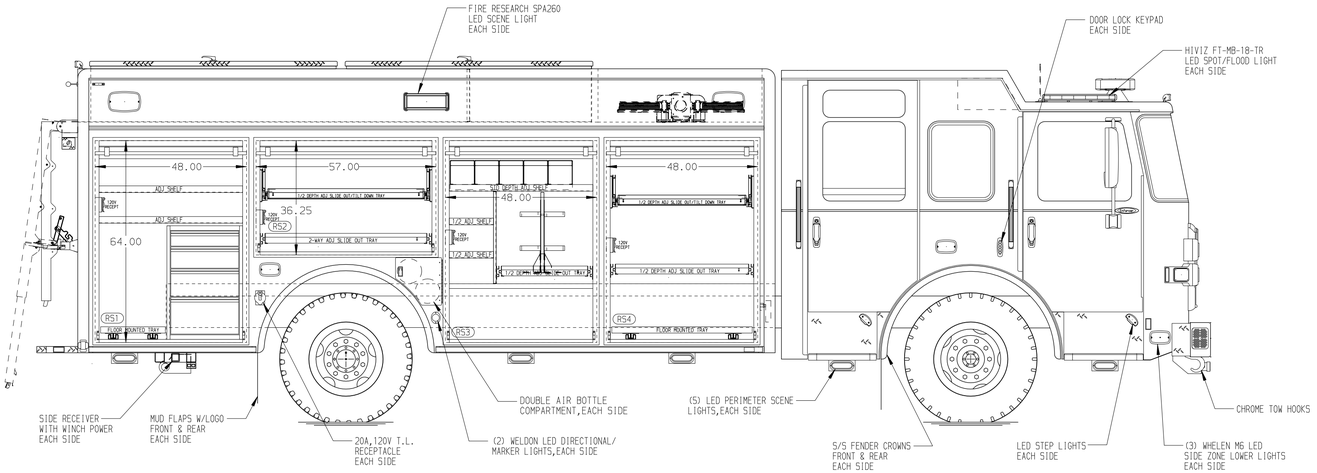

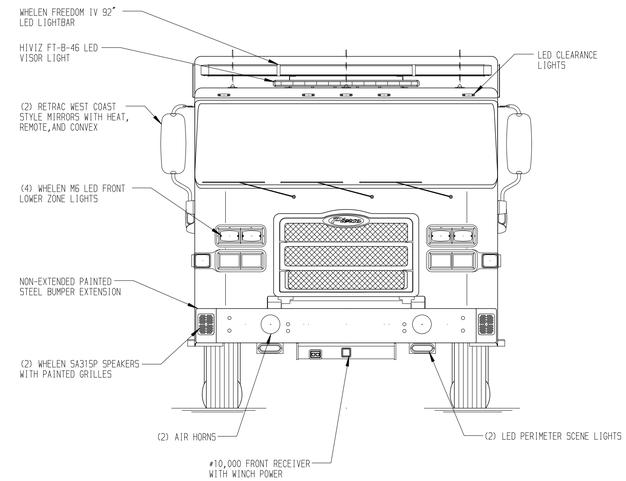

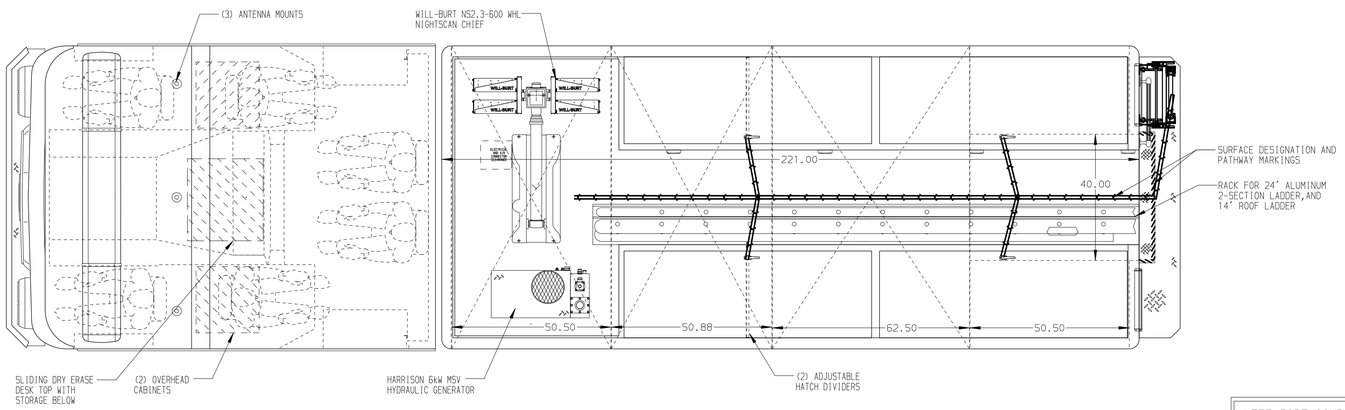

REAR COMPARTMENT CONTAINS THE FOLLOWING:

COMPARTMENT B1 CONTAINS:
- (1) 110"DP ADJ SLIDE OUT TRAY
- (1) 1/2 DEPTH ADJ SLIDE OUT/TILT TRAY
- (1) ELECTRIC CORD REEL WITH 200' OF 10/3 YELLOW CORD
- (1) VERTICAL COMPARTMENT DIVIDER(SHORT)
- (1) WINCH POWER OUTLET
-
-

LEFT SIDE COMPARTMENTS CONTAIN THE FOLLOWING:

COMPARTMENT LS1 CONTAINS:
- (1) CIRCUIT BREAKER PANEL
- (1) GENERATOR METER PANEL
- (1) SUB FEED BOX
- (1) VERTICAL COMPARTMENT DIVIDER
- (1) STD DEPTH ADJ SLIDE OUT TOOLBOARD
- (1) NIGHT SCAN CONTROLLER
- (1) 15A,120V 7-PLACE RECEPTACLE
-

COMPARTMENT LS2 CONTAINS:
- (1) 2-WAY ADJ SLIDE OUT TRAY
- (1) 1/2 DEPTH ADJ SLIDE OUT/TILT TRAY
- (1) 15A,120V DUPLEX RECEPTACLE
-

COMPARTMENT LS3 CONTAINS:
- (1) 1/2 DEPTH ADJ SHELF
- (1) 1/2 DEPTH ADJ SLIDE OUT TRAY
- (1) FLOOR MOUNTED TRAY
- (1) 15A,120V DUPLEX RECEPTACLE
-
-
-
-

COMPARTMENT LS4 CONTAINS:
- (1) 1/2 DEPTH ADJ SHELF
- (1) 1/2 DEPTH ADJ SLIDE OUT TRAY
- (1) FLOOR MOUNTED TRAY
- (1) 15A,120V DUPLEX RECEPTACLE
-
-
-
-
-

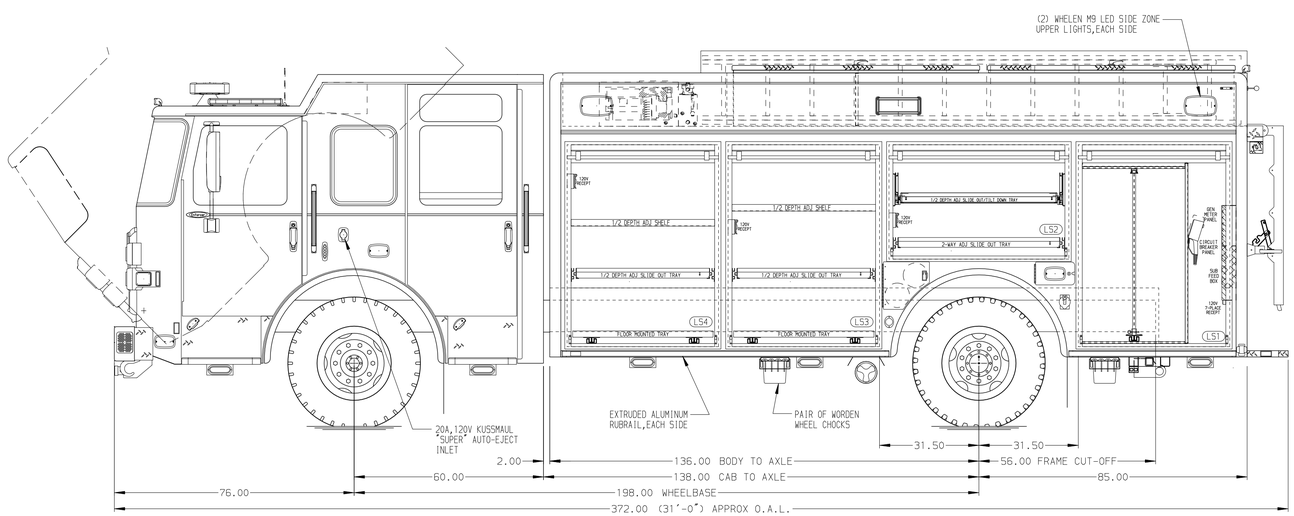

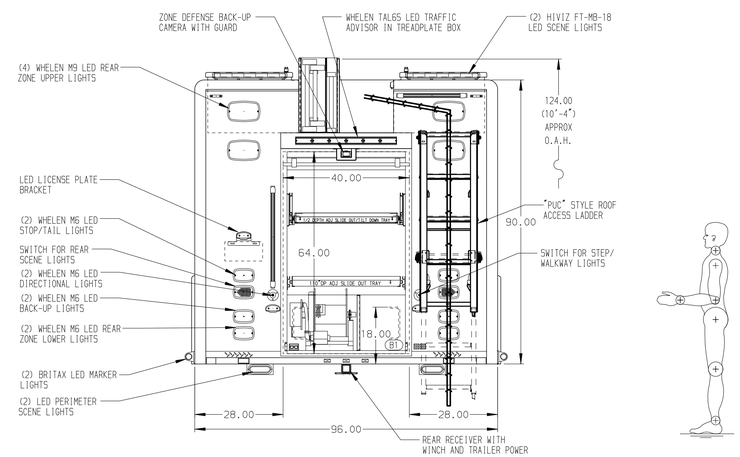

NOTE

DIMENSIONS SHOWN ARE APPROXIMATE AND ARE SUBJECT TO MINOR DEVIATIONS AS MAY OCCUR OR BE NECESSARY IN CONSTRUCTION.
MINOR DETAILS NOT SHOWN.

NOTES:
1. POLISHED S/S SCUFFPLATES ON CAB AND CREW CAB DOOR JAMBS
2. FLOOR IN CAB AND CREW CAB TO BE PADDED RUBBER
3. KUSSMAUL 12 HO BATTERY CHARGER LOCATED BEHIND DRIVER'S SEAT
4. BATTERY CHARGE INDICATOR LOCATED ON DRIVER'S SEAT RISER
5. S/S "L"-SHAPED GUARDS ON ALL BODY ROLL-UP DOORS
6. PULL STRAPS ON ALL BODY ROLL-UP DOORS
7. PIERCE LED STRIP LIGHTS IN ALL BODY AND HATCH COMPARTMENTS
8. RUBBER GRATING ON ALL COMPARTMENT SHELVES AND TRAYS

CLEAR DOOR WIDTH KEY

AMDOR ROLL UP DOORS:	-2 1/4"
GORTITE ROLL UP DOORS:	-2 1/2"
PIERCE DOUBLE LAP DOORS:	-4 1/4"
PIERCE LIFT-UP LAP DOORS:	-1 1/2"
(EX: 60"F-F - 2 1/4"= 57 3/4" CLEAR) (F-F)= FRAME TO FRAME	

REV	DATE	BY	CH	
7	18APR22	DHE	CDK	CHASSIS DATA
6	26JAN22	DHE	CDK	MAKE
5	18JAN22	DHE	CDK	PIERCE
4	22NOV21	DHE	CDK	MODEL
				EN6010

Pierce MANUFACTURING INC.

TITLE	HEAVY DUTY RESCUE NON-WALKIN	JOB NO.	36808
		SCALE 1:24	DATE
FOR	NEW JERSEY TRANSIT BID #735 ERIC TREVENA	DRAWN BY DHE	11NOV21
		CHECKED BY CDK	15NOV21
DWG NO.	36808AD	SHEET SIZE D	SHEET NO. 1 OF 1

View File Created 18-APR-2022 13:38:08