Pierce Enforcer Non- Walk-In Heavy Duty PUC Rescue

Saddle Brook Township

Job #35474

Features & Specifications

- Pierce Enforcer 84" Chassis with a 10" Raised Roof
- Cummins L9 450 hp 2017 EPA compliant Engine
- Allison EVS3000PR Automatic Transmission
- TAK-4 Independent Front Suspension
- 19.5' Rescue Body
- Harrison MPC 20kw Hydraulic Generator
- Delivered in December 2021

Sold By:
Bill Ring

FIRE & SAFETY SERVICES, LTD.

South Plainfield, NJ

web: www.f-ss.com · phone: 800-400-8017

RIGHT SIDE COMPARTMENTS
CONTAIN THE FOLLOWING:

COMPARTMENT RS1 CONTAINS:
- (1) STD DEPTH ADJ SLIDE OUT/TILT TRAY
- (1) FLOOR MOUNTED TRAY WITH SIDE SLIDES
- (1) 15/20A,120V DUPLEX RECEPTACLE

COMPARTMENT RS2 CONTAINS:
- (1) 2-WAY ADJ SLIDE OUT TOOLBOARD
- (1) 15/20A,120V DUPLEX RECEPTACLE

COMPARTMENT RS3 CONTAINS:
- (1) VERTICAL COMPARTMENT DIVIDER
- (3) STD DEPTH ADJ SHELVES
- (2) STD DEPTH SLIDE OUT TOOLBOARDS
- (1) 15/20A,120V DUPLEX RECEPTACLE

COMPARTMENT RS4 CONTAINS:
- (1) CAB LIFT CONTROLLER
- (2) FLAT TOP FLOOR MOUNTED TRAYS
- (2) STD DEPTH FLAT TOP SHELVES
- (1) 15/20A,120V DUPLEX RECEPTACLE

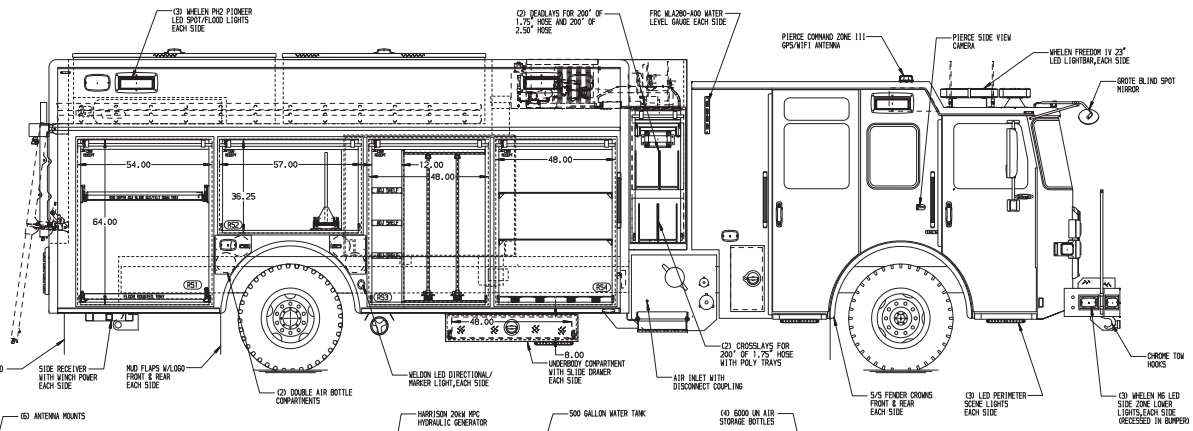

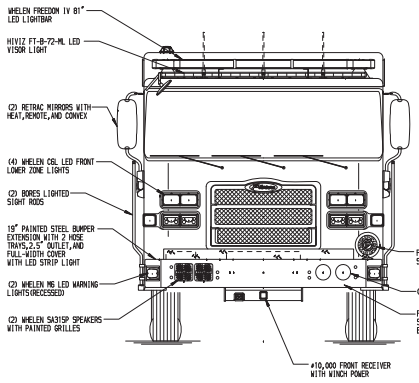

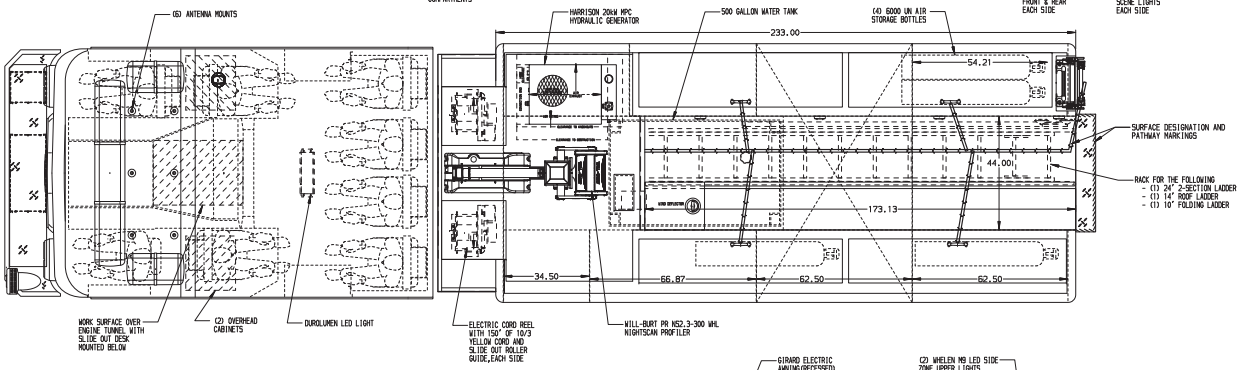

REAR COMPARTMENT CONTAINS
THE FOLLOWING:

COMPARTMENT B1 CONTAINS:
- (1) 58"DP FLOOR MTD ON-SCENE SLIDE OUT TRAY
- (1) FLOOR MOUNTED TRAY WITH SIDE SLIDES
- (1) HORIZONTAL FLOOR EXTENSION

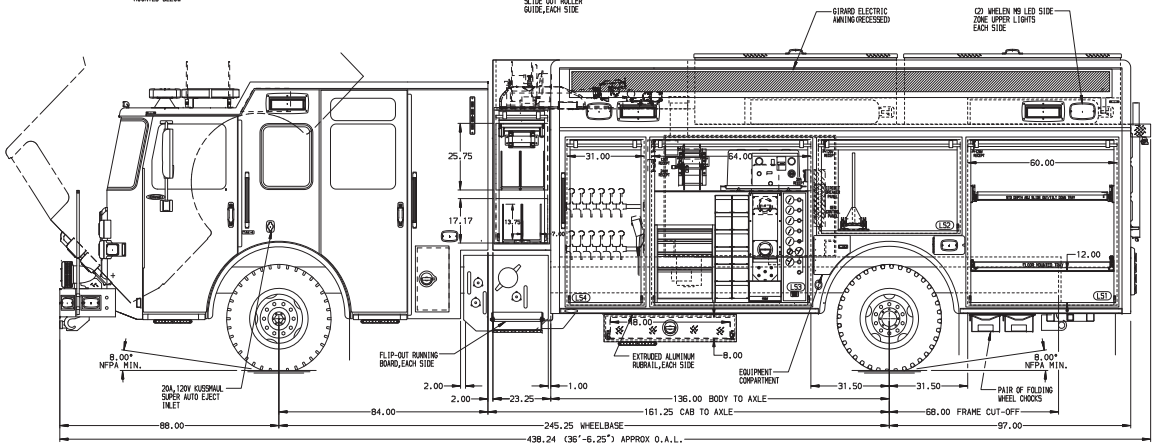

LEFT SIDE COMPARTMENTS
CONTAIN THE FOLLOWING:

COMPARTMENT LS1 CONTAINS:
- (1) STD DEPTH ADJ SLIDE OUT/TILT TRAY
- (1) FLOOR MOUNTED TRAY WITH SIDE SLIDES
- (1) 3/8" MOUNTING PLATE
- (1) 15/20A,120V DUPLEX RECEPTACLE

COMPARTMENT LS2 CONTAINS:
- (1) 2-WAY ADJ SLIDE OUT TOOLBOARD
- (1) 15/20A,120V DUPLEX RECEPTACLE
- (1) CIRCUIT BREAKER PANEL
- (1) GENERATOR METER PANEL

COMPARTMENT LS3 CONTAINS:
- (1) 4-DRAWER C-TECH CABINET
- (1) 15/20A,120V DUPLEX RECEPTACLE
- (1) 30A,240V T.L. RECEPTACLE
- (1) CASCADE SYSTEM CONTROL PANEL
- (1) "SPACESAVER"2-BOTTLE FILL ENCLOSURE
- (1) SIERRA BREATHING AIR BOOSTER PUMP WITH 15A, 240V T.L. RECEPTACLE
- (1) 3/8" MOUNTING PLATE
- (1) 12V USB PORT
- (1) LOW PRESSURE AIR REEL W/150' OF HOSE
- (1) RACK FOR 12 SCBA BOTTLES

COMPARTMENT LS4 CONTAINS:
- (1) NIGHTSCAN CONTROLLER

HOSEBED CAPACITY
Ⓐ - 500' OF 5.00" HOSE

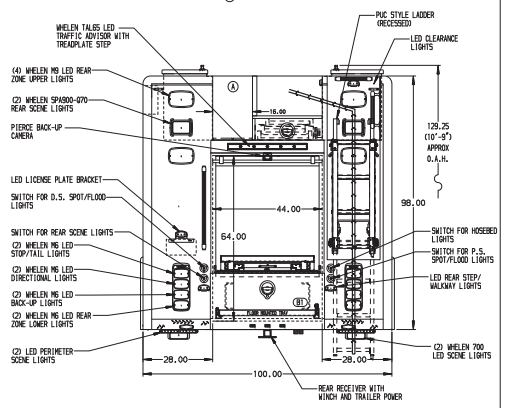

NOTE

DIMENSIONS SHOWN ARE APPROXIMATE AND ARE SUBJECT TO MINOR DEVIATIONS AS MAY OCCUR OR BE NECESSARY IN CONSTRUCTION.
MINOR DETAILS NOT SHOWN.

NOTES:
1. PIERCE 1500 GPM SINGLE STAGE PUC PUMP
2. WARN ZEON 10-S #10,000 PORTABLE RECEIVER STYLE WINCH
3. POLISHED S/S SCUFFPLATES ON CAB AND CREW CAB DOOR JAMBS
4. FLOOR IN CAB AND CREW CAB TO BE ALUMINUM TREADPLATE
5. KUSSMAUL PUMP PLUS 1200 CHARGER LOCATED BEHIND THE PASSENGER'S SEAT
6. BATTERY CHARGE INDICATOR LOCATED ON DRIVER'S SEAT RISER
7. #5,000 RECEIVER STYLE ROPE ANCHORS
8. PULL STRAPS ON ALL BODY AND CROSSLAY ROLL-UP DOORS
9. S/S GUARDS ON ALL BODY ROLL-UP DOORS
10. PIERCE LED STRIP LIGHTS IN ALL BODY,HATCH COMPARTMENTS,AND HOSEBED
11. TURTLE TILE ON COMPARTMENT FLOORS IN LS2,RS2,LS4 AND TRAYS IN RS3,RS1,LS1, AND B1
12. (8) FIRE VULCAN STREAMLIGHTS,(1) ABOVE EACH FORWARD FACING SEAT AND (4) SHIPPED LOOSE
13. (4) TECNIQ BLUE FLOOR ILLUMINATION LIGHTS IN CREW CAB

MAXIMUM O.A.L. 36'-7"

CLEAR DOOR WIDTH KEY	
ANDOR ROLL UP DOORS:	-2 1/4"
GORITTE ROLL UP DOORS:	-2 1/2"
PIERCE DOUBLE LAP DOORS:	-4 1/4"
PIERCE LIFT-UP LAP DOORS:	-1 1/2"

(EX: 60"F-F - 2 1/4"= 57 3/4" CLEAR)
(F-F)= FRAME TO FRAME

REV	DATE	BY	CH
1	21APR21	DHE	AZU
2	08MAR21	DHE	AZU
3	17DEC20	DHE	AZU

CHASSIS DATA	
MAKE	PIERCE
MODEL	EN8410

Pierce MANUFACTURING INC.

TITLE	HEAVY DUTY RESCUE RESCUE PUC W/500 GAL WATER TANK
FOR	TOWNSHIP OF SADDLE BROOK BID #457 BILL RING
DWG NO.	35474AD

JOB NO.	35474
SCALE	1:24
DATE	
DRAWN BY	DHE 10DEC20
CHECKED BY	AZU 10DEC20
SHEET SIZE	D
SHEET NO.	1 OF 1

View File Created 21-APR-2021 12:58:22